G2K**SR1**

USER MANUAL

For more information
on the Gator range
go to our website

gatordriverassist.com

INCLUSIONS:
Dash Cam, GPS Power Cable, 16GB Micro SD Card

Table of contents.....2
Product overview.....3
Product features.....3
System contents.....4
Optional accessories.....4
Product structure.....5
Inserting Micro SD Card.....7
Fixing the Dash Cam.....7
Installation of Dash Cam.....8
Button function.....9
Video recording screen.....10
Mode button.....11
Menu button (Settings/Setup).....11
Video settings menu.....12
Still picture settings menu.....13
Playback settings menu.....13
Setup menu (All modes).....14
Pairing to your Smartphone.....15
Dash Cam startup screen.....16
Dash Cam interface screen.....17
Photo & Video file display screen.....18
Photo & Video download screen.....19
Download to your phone.....20
GPS logger.....20
Dash Cam features explained.....21
Formatting the SD card.....23
Internal battery.....23
Factory reset.....23
Connecting to a computer.....24
Product specifications.....25
Trouble shooting guide.....26
Safety information & warnings.....31
Infringement of copyright warning.....31
Technical assistance.....32

Product overview

Thank you for purchasing the Gator G2KSR1 2K QHD Dash Cam. This product is a convenient and durable traveling video and data recorder. Please ensure that you have read the product manual and instructions in full, prior to installation and use. Failure to do so may result in product failure/damage or incorrect operation and therefore impact the product performance.

Product features

- Video resolution 2K QHD 1440P
- 2.0" 4:3 High-resolution LCD screen
- 161 Degree wide angle lens
- WiFi & GPS tracking via App
- GPS Tracking (PC & MAC supported)
- Speed sign speed limit recognition (SSR)
- Traffic light recognition (TLR)
- Stop & Go stationary vehicle function
- G-Sensor function
- Seamless cycle loop recording
- Adhesive surface mount
- 12V in-car USB charger
- 16GB Micro SD card included
- Supports Micro SD card class10 up to 128GB

System contents

Dash Cam & Adhesive Mount

Dash Cam GPS power cable

16G Micro SD Card

Optional accessories (Sold separately)

NOTE: The GUNIHWC Hardwire Kit is a simple plug and play solution to hardwire any Dash Cam or device using Mini or Micro USB for power.
The Hardwire Kit is compatible with 12V/24V DC for car or truck installations.

Product structure

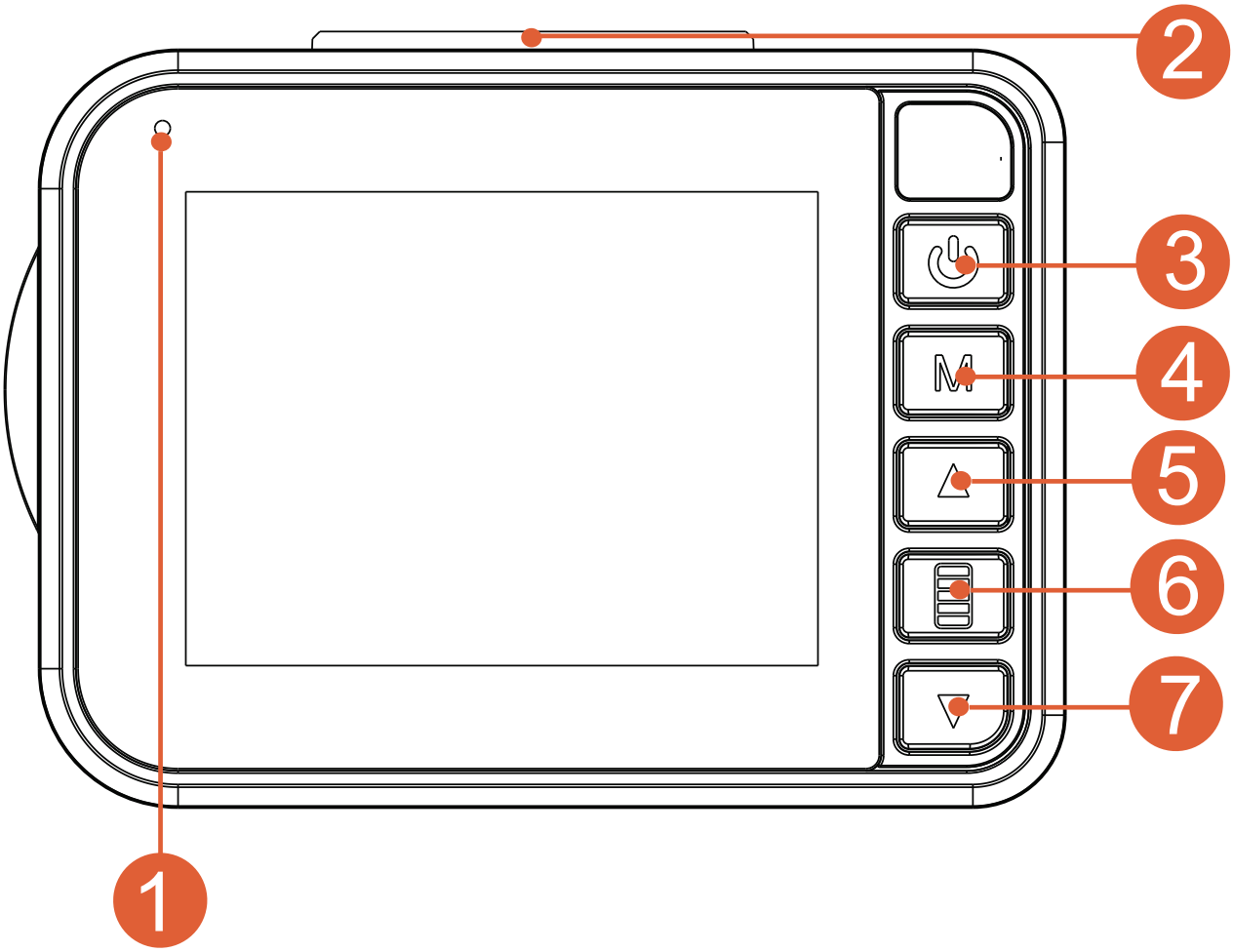

1. Led Indicator
2. Mounting bracket fixing point
3. Power/OK button
4. Mode button
5. Up button
6. Menu button
7. Down button

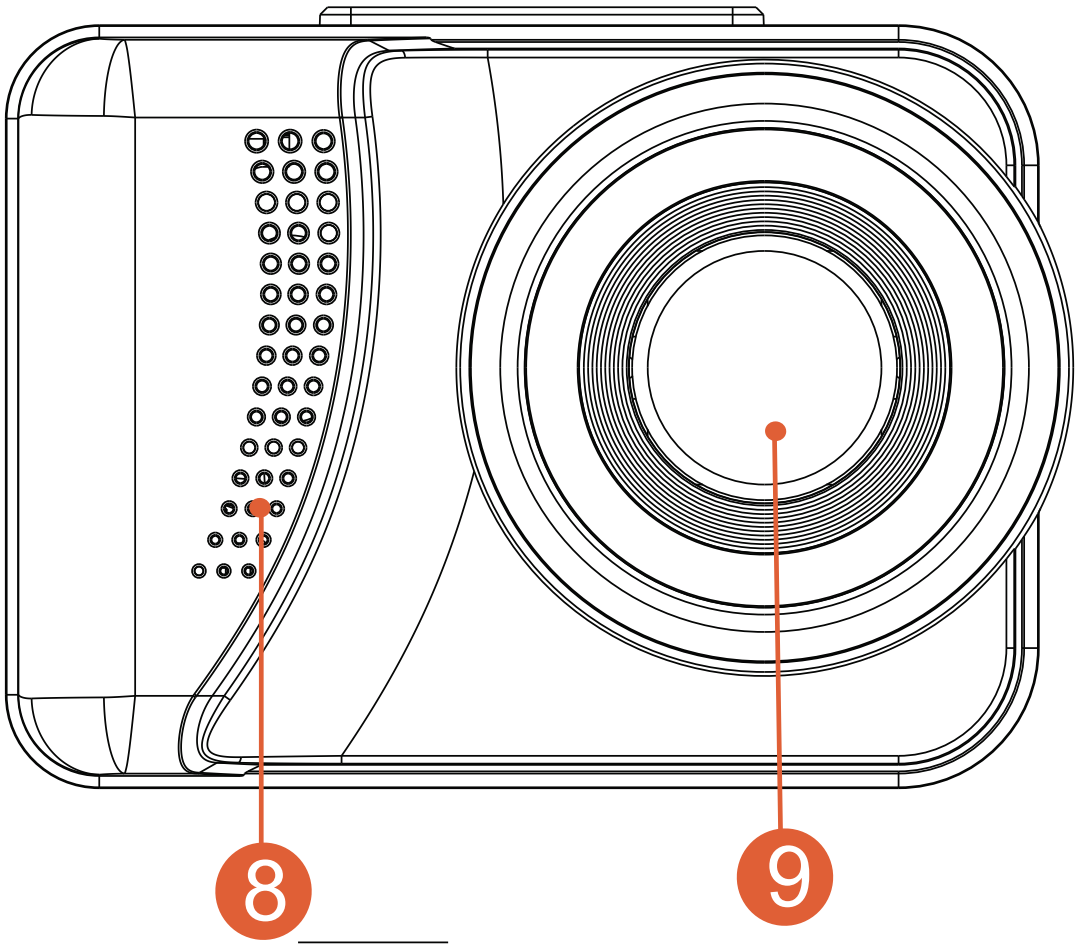

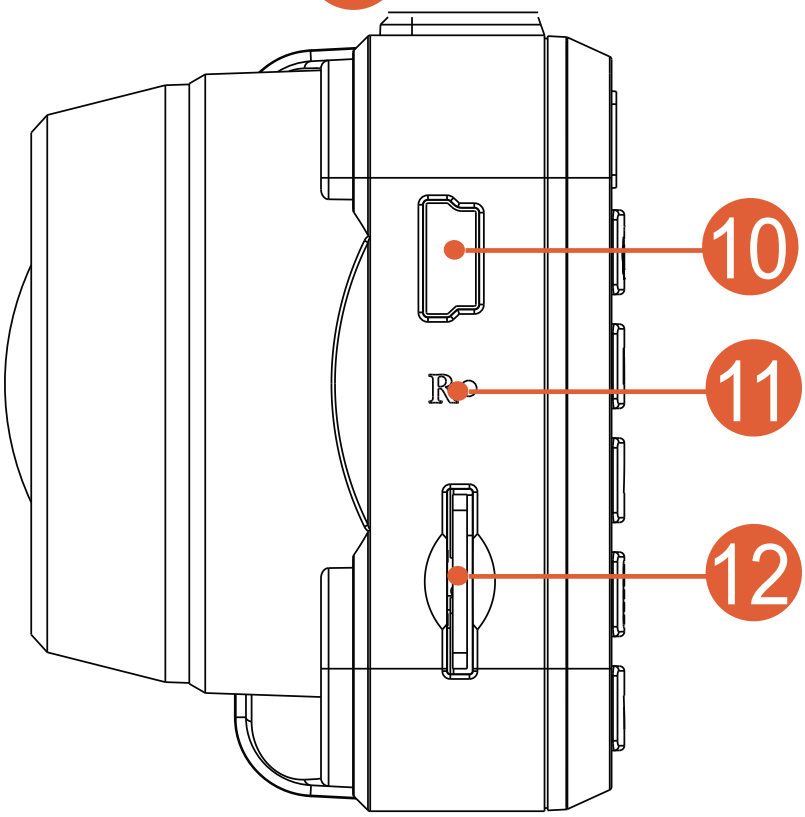

8. Speaker
9. Camera lens
10. Mini USB Power socket
11. Reset button
12. Micro SD card slot

Fixing the Dash Cam

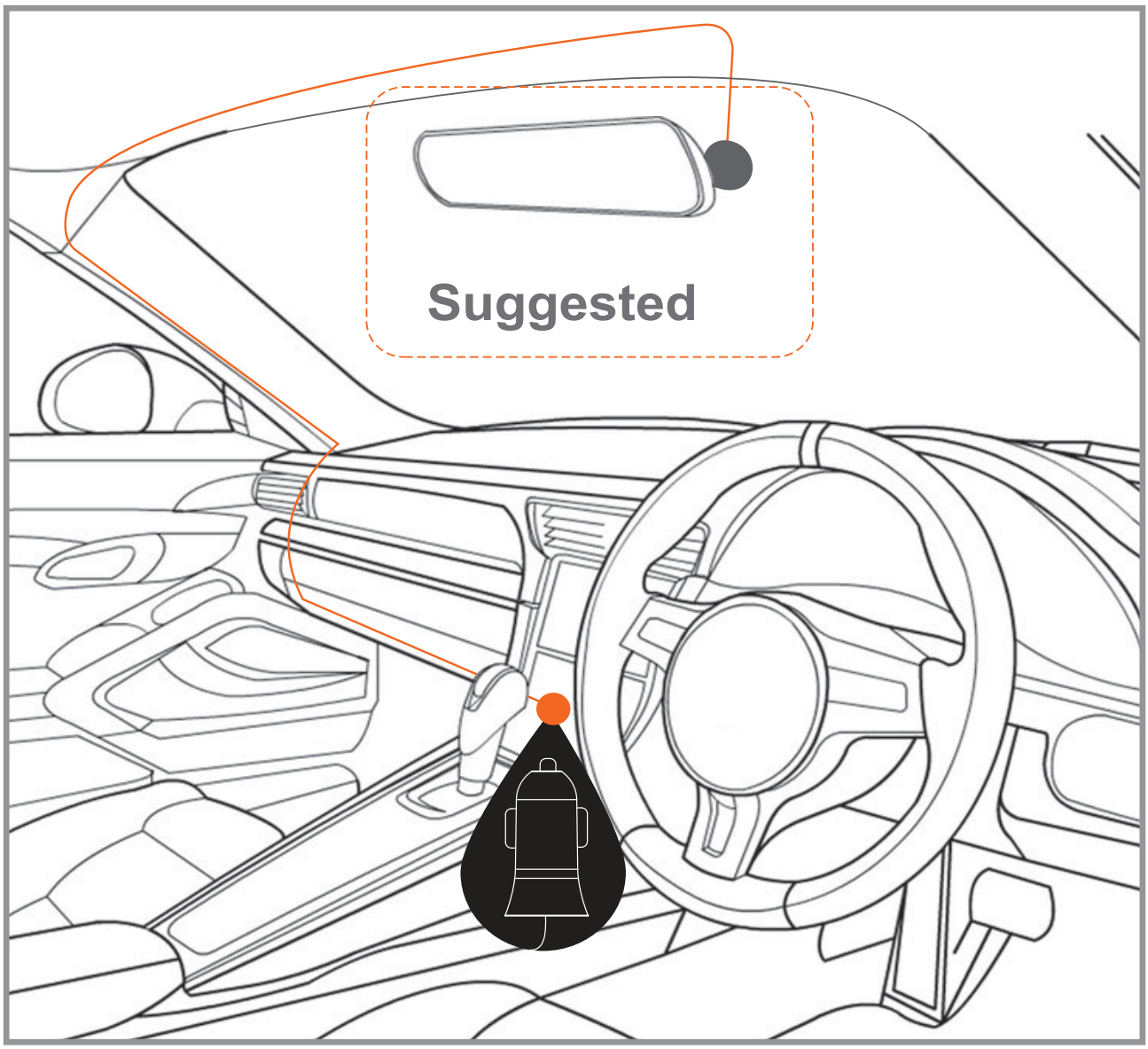

Installation of Dash Cam

1. Check the mounting position of the Dash Cam camera first before installation.
2. Ensure windscreen is clean and free of debris. Use an Alcohol wipe to enhance adhesion.
3. Place mounting bracket on Dash Cam after checking Dash Cam position. Remove backing off 3M tape and press & hold firmly to windscreen for 60 seconds.
4. Fix where the vision is not blocked (Place close to rear-view mirror is recommended). Do not install the device on airbag or within its working range.
5. Insert Micro SD card into the Dash Cam
6. Insert power cable into the Micro USB port of the Dash Cam. Connect the DC charging end of the power cable into the 12V power socket of your vehicle.
7. Adjust the camera angle to get the best view. Ensure 1/4 of the vehicles bonnet is visible from the bottom of the screen for alignment.
8. Turn vehicles ignition on, and the Dash Cam and it will automatically start recording.
9. When recording the recording indicator LED will flash red.
10. For the Dash Cam to work it must receive power from the charging adapter. Once power is removed or turned off the Dash Cam will save the current file and turn off.

Button function

Power/OK Button	1. To power ON and OFF, press and hold for 3 seconds. 2. Short press to confirm selections. 3. When recording video, short press to stop & start recording.
Mode Button	1. Short press it to switch modes when not recording 2. During the recording process, short press to turn microphone recoding ON or OFF.
UP Button	Short press to choose file or menu option
Menu Button	1. Short press to enter/exit menu mode & playback features. 2. Short press in recording mode to lock current video file.
Down Button	1. Short press to choose file or menu option 2. Short press in recording mode to open WiFi function

Video recording screen

When connected to power the Dash Cam will automatically turn on. Once power is disconnected it will automatically turn off and save the last recorded file.
A video camera icon at the top left corner of the LCD flashes to signify you are recording video. A timer will appear on the top left. The LED recording indicator will start flashing RED also. To stop and start recording, simply press the Power button.

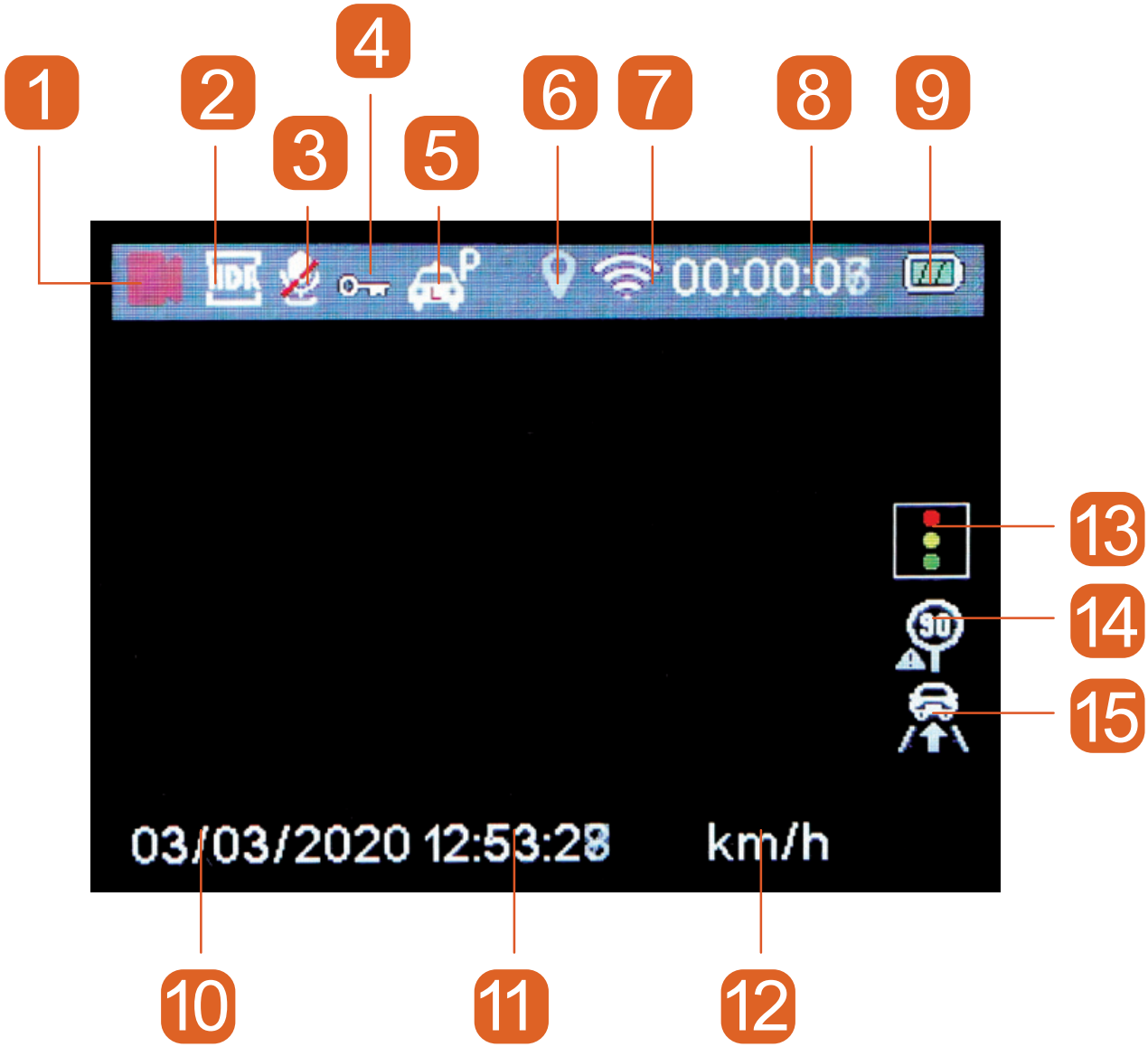

Video recording screen cont...

1) Video mode (Flashes when active)
2) WDR icon
3) Microphone icon
4) Locked file icon
4) Parking mode
5) GPS icon
6) Wifi icon
7) Recording timer
8) Battery meter
9) Date stamp
10) Time
11) Speed measurement
12) Traffic light recognition (TLR)
13) Speed sign recognition (SSR)
14) Stop & Go icon

Mode button

When in recording mode, stop recording and press the Mode button to switch between Movie, Picture & Playback modes.

Menu button (Settings/Setup)

Settings can only be accessed when not in recording mode. Each mode has its own settings to edit. Press the Menu button once to access settings, twice to access setup settings for each mode.

Video settings menu

Settings can only be accessed when not in recording mode.

Function	Description
Resolution	QHD P30, FHD P60, FHD P30, HD P30
Loop recording	OFF, 1, 3, 5 or 10 Minutes
HDR	Off / On
Exposure	+2/3,+1/3,+0.0,-1/3,-2/3,-1.0, -4/3,-5/3,-2.0
G Sensor	Off, Low, Medium or High
Record Audio	Off / On
Date stamp	Off / On
Speed limit signs traffic (SSR)	Off / On
Traffic light recognition (TLR)	Off / On
Stop and go	Off / On
Exit	Exit Menu

Still picture settings menu

Function	Description
Capture Mode	Single, 2, 5, 10 second timer
Resolution	12/10/8/5/3/2/1.3 M & VGA
Quality	Fine, Normal, Economy
ISO	Auto, 100, 200, 400
Anti-Shaking	Off / On
Date Stamp	Off, Date, Date/Time
Exit	Exit Menu

Playback settings menu

Function	Description
Delete	Delete Current / Delete All
Protect	Lock or unlock video files
Slide Show	Slide shows recorded files
Exit	Exit Menu

Setup menu (All modes)

Function	Description
WiFi	Off / On
Date / Time	DD /MM / YY
Screen Saver	OFF, 15, 30 Seconds or 1 Minute
Delayed Power Off	5, 10 or 15 seconds
Beep Sound	Off, Low, Medium or High
Language	English, Vietnamese
Frequency	50Hz, 60Hz
GPS	Off / On
Speed Unit	Off, MPH, KMH
Parking Monitor	Off, Low, Medium or High
Format	Format SD card on Dash Cam
Default Setting	Restore default settings
Version	System Version
Exit	Exit Menu

Pairing to your Smartphone

Recording video, taking photos, live streaming, GPS data, download files and changing Dash Cam settings can all be done via WiFi and downloading the ‘G2KSR1’ APP.
Scan the QR codes below for your device.

For App Store:

For Google Play:

1. To pair the Dash Cam with your smartphone, go into the setup menu on your Dash Cam and turn Wifi on.
2. The Dash Cam will display the SSID name and password to connect to your phone.
3. Then go to your WiFi settings on your smartphone, turn WiFi on, search for devices and it should display all devices available for connection.
4. Select your Dash Cam model SSID name as displayed on the Dash Cam’s screen.
5. Enter the password 12345678.
6. Once successfully paired to your DASH CAM the display will say WiFi Connected
7. A green WiFi symbol will also appear on the top of the Dash Cam’s screen
8. Then launch the ‘G2KSR1’ Dash Cam APP to access functions and settings.
9. On the Home App screen select wording ‘WIFI CAMERA’ and then your Smartphone should now display your Dash Cam’s view in real time.

Dash Cam startup screen

Once your Smartphone's WiFi is connected to the Dash Cam, press here to connect with the G2KSR1 APP.

Dash Cam interface screen

Photo & Video file display screen

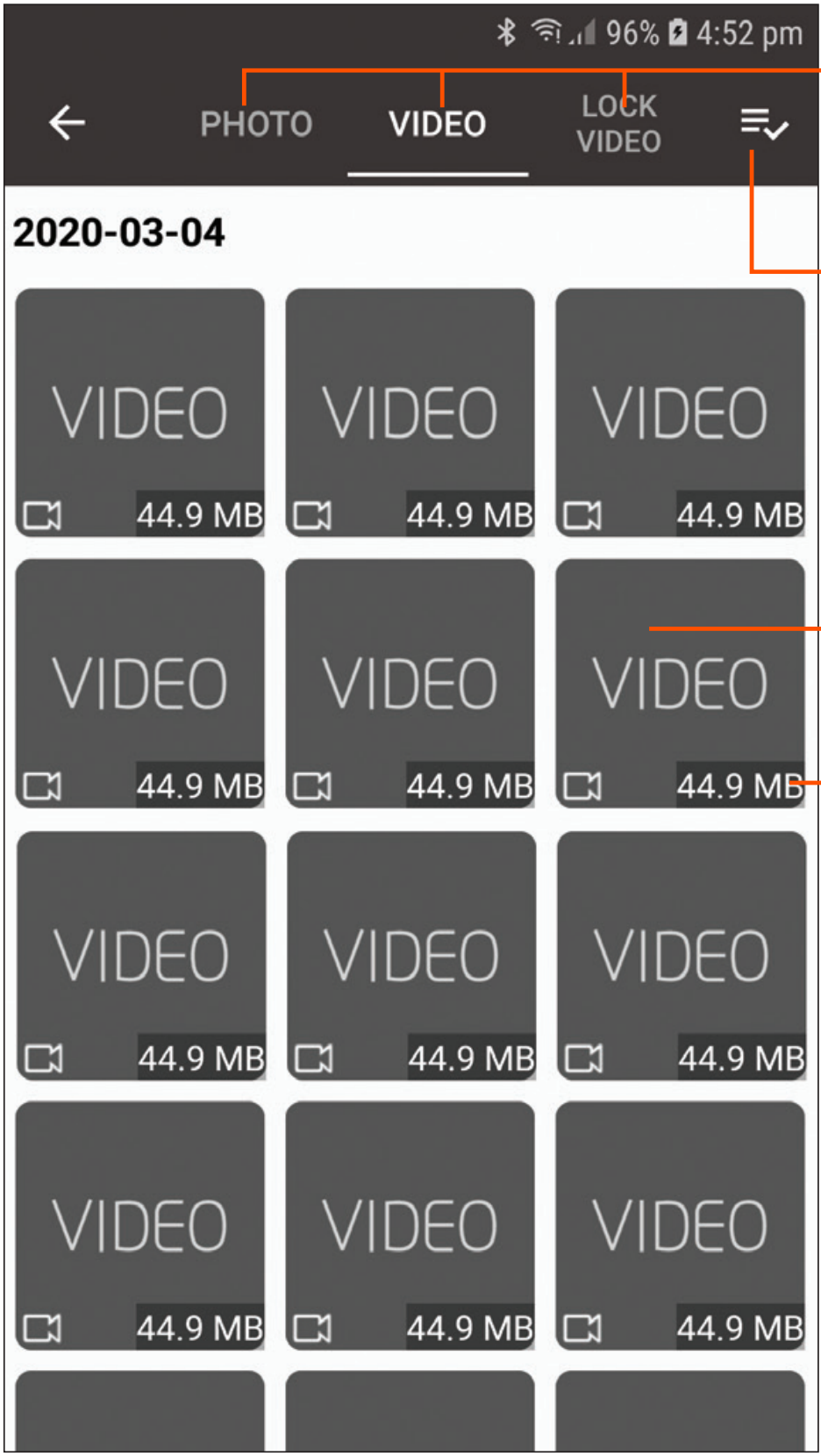

Recorded file Types

Select to download photo & video files to your Smartphone

Recorded file

File size

Photo & Video download screen

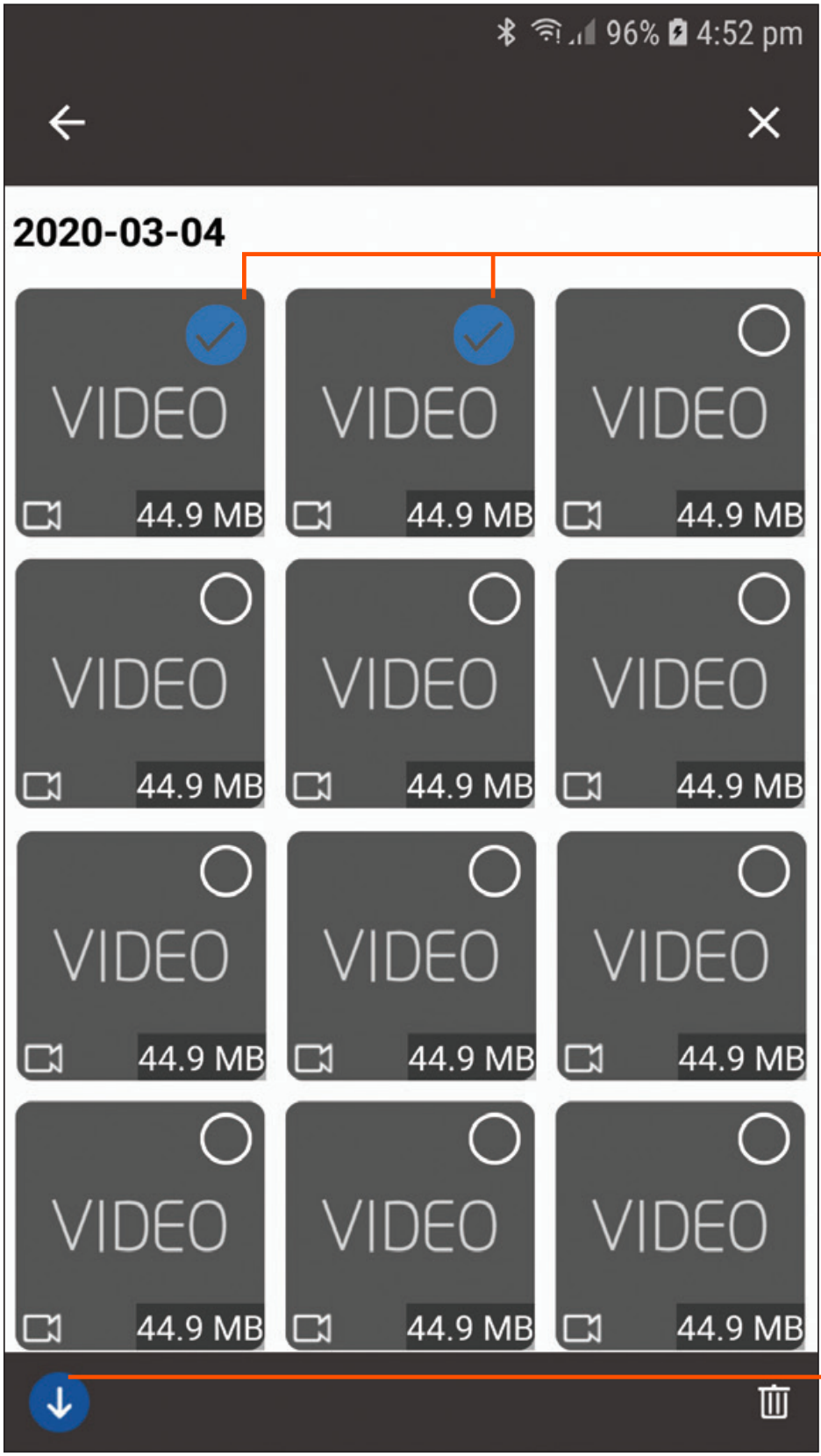

Download to your phone

To download recorded files to your Smartphone, select the type of file, photo/video/lock video. If you have a lot of videos, it may take a bit of time before it will load images onto your screen, it may appear empty to start with, be patient, the video images should appear in a minute. Click on the circle icon at the top right of each thumbnail, this will change to a tick icon ready for download. Then click on the downward pointing arrow at the bottom left of the screen. Patience is needed while it downloads the videos, the more videos you select, the longer it will take to download. Please keep in mind that this footage is High definition and is quite large. (Make sure there is sufficient space on your phone).

GPS logger

The GPS data is automatically saved to the video files. In order to see the GPS data, you will need to download the video from the Dash Cam to your computer and view it through the free downloadable software (GPSPlayer) from our website. Go to www.gatordriverassist.com and search for the model G2KSR1. This viewer is for both PC & MAC format.

NOTE: To avoid any possible GPS signal interference, make sure the Dash Cam is away from any other car audio equipment.

Dash Cam features explained

Speed sign speed limit recognition (SSR)

This feature will detect the traffic speed limit signs whilst travelling on the road. A voice prompt will alert the driver and a speed symbol showing the alerted speed will show on the screen.

Traffic light recognition (TLR)

When the traffic indicator status of the traffic light changes from red to green, a tone will alert you that the lights have changed. This only recognizes the change in the traffic light sequence if you are the first vehicle facing the traffic lights.

Stop & Go stationary vehicle function

The device plays a tone and displays an alert when all vehicles are stationary and the stopped traffic in front of you starts moving.

Parking monitor function

When Dash Cam is turned off but parking monitor is turned on. If the vehicle is impacted or experiences a vibration. Depending on the sensitivity level and or the amount of force, the Dash Cam will automatically start recording for 15 seconds. After the recording the Dash Cam will automatically power off and return to it’s monitoring status.

Loop recording function

This feature allows you to set the size of the files your Dash Cam will record before saving and creating a new file. It allows the Dash Cam to record over the oldest recorded files once the card is full. This can be turned OFF, or record 1, 2, 3, 5 or 10 minute video files. If you want to keep any of the files it is best to upload them to your computer. We recommend the Dash Cam to be set to '3' minute files.

Note: With this function turned off it may fill up the SD card as no files will be overridden. Once the card is full the Dash Cam will stop recording.

G Sensor function

This function activates in the case of a car accident by determining the gravitational acceleration (1g = 9.8 meters/second^2). When this function activates the Dash Cam will automatically sync a 10 second video clip and save it to the Event folder on the SD card. We recommend Low Sensitivity to avoid false triggers.

Note: With this function turned on it may fill up the SD card with locked video files. Re-format the SD card to create space. The device does NOT guarantee video recording of all accidents as built-in impact sensor may not be activated due to combination of user settings and the level of impact during the collision.

Formatting the SD card

You should do this at least every 2 to 3 months
It is recommended you do this to keep the card in good running order and to ensure you purge any locked footage that may have been saved in the past that you no longer need and is taking up space. Note: Back up files you wish to keep prior to formatting, as formatting will delete ALL files on the SD Card.

Internal battery

The internal battery is small and only designed to provide enough power to securely save the last recording when power is disconnected and to retain date and time settings. The Dash Cam is designed to be connected to power at all times when operating. If the Dash Cam is not used for an extended period of time the battery may become completely discharged which will cause the time and date on the device to default to the factory settings. If this occurs please completely recharge the Dash Cam before use.

Factory reset

To hard reset the device back to its original settings in the case of a system jam or crash. Insert a fine point paper clip into the reset hole next to Micro SD card input.

Connecting to a computer

You can remove the SD card from the Dash Cam and plug the card directly into your computer to access files. With the SD card inserted, and when connected to a computer. Three options will be available; Mass Storage , PC Camera and Video. Mass Storage allows the SD card to be accessed via computer as an external storage. PC Camera function allows the Dash cam to be used as a PC Camera. Video allows the Dash Cam to function normally while charging via the computer.

Product specifications

Display	2.0" High-resolution screen
Viewing Angle	161 Degree wide angle lens
Video	MP4
Resolution	2K QHD 1440P @ 30fps
Video format	MP4
WiFi & GPS	In built, tracking via App
Video Codec	H.264
Picture format	JPG
Picture	12M
Functions	WDR, G-Sensor, Loop recording SOS lock function, Date stamp
OSD Language	English, Vietnamese
Audio	Built-in Microphone and speaker
Storage	Micro SD SDHC/XC (Class 10 up to 128GB Max)
Frequency	50HZ/60HZ
Car charger	DC input: 12 or 24V, output: 5V

Trouble shooting guide

Under normal operating conditions, if there are problems with the device, please refer to the following methods to resolve them.

Problem: Cannot take pictures or record video?
Solution: • This kind of issue is almost ALWAYS an issue related to the Memory card. Please check whether there is enough space on the micro SD. As mentioned earlier some footage is write protected and accumulates on the SD card over time.
• Format the SD card to be sure the card is no longer full of write protected footage.
• If the device keeps Stopping automatically while recording or it is recording Jumpy footage with dropped frames, this may be due to the SD cards write speed.
• You must use a high-speed micro SD card. To tell if you have the required high-speed card, check if it has the 'Micro SDHC/XC' logo on the SD card. Cards are often labelled as HD video capable but that is not always true. HD recording requires a Card with class 10, the card should have this printed on it somewhere.

Trouble shooting guide

PLEASE NOTE: SD cards have a finite life. Their life is based on the amount of times the card is written to. The SD card WILL eventual wear out over time.

Dash Cams are very heavy users of the SD card because they are constantly writing to memory. Some cards have a longer life than others. The longest life cards are often labelled as "ENDURANCE" or "HEAVY DUTY"

Problem: The adhesive mount will not stay attached to the windscreen

Solution: • Ensure windscreen is clean and free of debris, use glass cleaner or an alcohol swab to clean.

• Ensure that the plastic film has been removed from the adhesive pad.

• When mounting hold the bracket firmly to the windscreen for at least 60 seconds.

Trouble shooting guide

Problem: The Dash Cam will not power on
Solution: • Vehicle Accessory Socket - Check the vehicle accessory socket has power, simply plug another device and see if it powers up (or use a test light / multimeter to check for power).
• Dash Cam Power Cable - Check the fuse in the tip of the accessory plug, it may need to be replaced.
• Dash Cam - Connect the Dash Cam to a computer via the USB cable to see if it powers up.

Problem: The Dash Cam shuts down when connected to the vehicle and the battery will not charge
Solution: • The battery will only charge while the vehicle is switched on.
• If the vehicle is not frequently used the Dash Cam battery will fully discharge and may need to be connected to a domestic USB charger (such as a smartphone charger) for approximately 4 hours to fully charge.

Problem: The Dash Cam battery only lasts for a few minutes when power is disconnected
Solution: • The Battery only holds enough power to safely shut down the Dash Cam, securely save the last file when power is disconnected and retain settings.
• The Dash Cam is designed to be connected to power at all times while being used.

Trouble shooting guide

Problem: The Dash Cam feels warm when it is operating
Solution: • It is normal for the Dash Cam to feel warm to the touch during typical use, especially when it is recording HD video.

Problem: Cannot record video or take pictures
Solution: • Check to see whether there is enough space on the Micro SD card. If not, the Micro SD card will need to be formatted or files need to be deleted.

Problem: The Dash Cam stops automatically while recording
Solution: • Check to see whether there is enough space on the Micro SD card.
• Ensure correct Micro SD card is being used, 8-128Gb Class 10 or above Micro SDHC/XC is recommended. Other types of Micro SD cards may not be suitable for use in Dash Cams.
• If the correct Micro SD Card is being used, format the Micro SD Card in a computer.
• Micro SD cards have a limited lifespan and become corrupt after a period of time. This is due to the continuous loop recording function. If this has occurred, you will need to replace you Micro SD Card.

Problem: The Dash Cam is frozen or not responding
Solution: • Reset the unit by pushing and holding the reset button for a few seconds and try again.
• Format Micro SD Card in a computer.

Trouble shooting guide

Problem: Video files can not be played on the PC
Solution: • The video files from the Dash Cam are in .MP4 format and may not be compatible with your PC if suitable playback software is not installed.

Problem: The Micro SD card is not recognised by the Dash Cam
Solution: • Format the Micro SD card before using. Be sure the Micro SD card is compatible with the device, see “The Dash Cam stops automatically while recording” fault above.

Problem: My videos are blurry, dirty or discoloured
Solution: • Check to see if there are any finger prints or dirt present on the Camera lens. If needed, clean with a soft dry cloth before recording.
• Remove the transparent lens cover during installation.

Problem: Unresolved issues
Solution: • Reset the unit by pushing and holding the reset button for a few seconds and try again.
• Format Micro SD Card in a computer.
• Should the problem persist please contact your Gator Service Agent for your country.

Safety information & warnings

Do not use the Dash Cam in damp working conditions; the Dash Cam is not waterproof.
Do not try opening the shell or trying to repair the Dash Cam by yourself. If the accessories for the Dash Cam have any problems, please take it to an authorised repair agent for repair.
Do not use a chemical substance, cleaning solvent or cleaner to clean the Dash Cam, please use a moist soft cloth if you would like to clean the Dash Cam.
Please pay attention to cleaning the lens surface, use a moist soft cloth to clean the lens before use, to avoid poor video footage.
Gator is NOT responsible for the loss of any recorded video during operation. Although designed to withstand high impact of a car collision, Gator does NOT guarantee recording of accidents where the impact may cause the device to be damaged.

Infringement of copyright warning

Please note that this product is for personal use only, the method of use shall not violate the goods infringe on domestic or international copyright laws. Even recorded images for personal use only, please note that in some cases to use this product to record performances, exhibitions or business activities of the images may infringe the copyright or other legal rights and interests of others.

Technical assistance

If you need assistance setting up or using your Gator product now or in the future, call Gator Support. Australia

TEL: 03 – 8587 8898
FAX: 03 – 8587 8866
Mon-Fri 9am – 5pm AEST

If you would like to download a digital copy of this manual, or other Gator manuals/software, please visit the http://gatordriverassist.com website and click on ‘Firmware & Manuals” or search for the product model number for more information, accessories and products.

This manual is considered correct at time of printing but is subject to change. For latest manuals and updates refer to the website.

Copyright © 2017 by TDJ Australia
All rights reserved. No part of this publication may be reproduced, distributed, or transmitted in any form or by any means, including photocopying, recording, copying or other electronic or mechanical methods, without the prior written permission of the author.

Please retain this user guide for future reference.