PLU	580636
Construction	Mono crystalline solar cells
Max Power (nom.)	160W
Dimensions (folded)	665x759x75mm
Dimensions (open)	1335x759x35mm
Max Power voltage	18V
Max Power current	8.88A
Open Circuit voltage	22.3V
Short circuit current	9.19A
Power tolerance	±3%
Cables length	(5+0.9) Meter
Operating temperature	-40^0 to 85^{0}C
Standard test conditions	AM1.5 1000W/m^2 25^{0}C
Manufactured in	China

PLU: 580636
CODE:TPS-105S-160F
Manufactured and packaged for
SRGS PTY LTD
ABN 23 113 230 050
751 Gympie Road, Lawnton, Queensland 4501, Australia
MADE IN CHINA

RIDGE RYDER 4X4 ACCESSORIES

160W FOLDING SOLAR BATTERY CHARGER KIT

INSTRUCTIONS

12 MONTH WARRANTY

RIDGE RYDER 4X4 ACCESSORIES

291 x 204mm

Please ensure that you have read the product manual and instruction in full prior to use. Failure to do so may result in incorrect operation and therefore impact on the products performance.

SAFETY/WARNING

• Before using the RIDGE RYDER solar folding kit ensure the instructions have been read and understood.
• The solar folding kit is not intended for use by young children or infirm persons. Please keep away from pets.
• RIDGE RYDER solar folding kit is designed to charge most 12 volt battery types including: Flooded (Lead acid), Gel, Sealed/Absorbed Glass Mat (AGM) and VRSLA batteries.
• Always wear the appropriate Personal Protective Equipment (PPE) when working near batteries. This includes gloves and eye protection.
• Ensure battery is being charged in a well-ventilated area. Explosive gases may escape from the battery during charging. Never charge a battery in a closed off space or in an area without ventilation.
• Never smoke, use an open flame or create sparks near a battery or charger whilst charging as gases may cause explosion. Please keep burning cigarettes, flames or other ignition sources away from the charging battery at all times.
• Do NOT attempt to use the solar folding kit if the cables or plugs are damaged. These units do not contain serviceable parts. To avoid a hazard ensure that any damage to the unit, cable or plugs are replaced by a qualified technician.
• Do NOT disassemble the solar folding kit. The warranty will be void if this instruction is ignored.
• If battery is still connected in the vehicle, ensure vehicle ignition is switched off before charging the battery.
• Do NOT place the solar folding kit on fabric/leather/vinyl seats,on the battery or balanced in the engine bay.
• Never charge a frozen battery, non-rechargeable, lithium, calcium or dry cell battery.
• The RIDGE RYDER solar folding kit may have sharp edges - please handle with care.
• Do NOT bend or scratch solar folding kit.
• Do NOT walk, sit or place heavy items onto the solar folding kit or the kit in the bag.
• Do NOT use a high pressure hose to clean the solar folding kit. Use a clean microfiber cloth to clean solar folding kit surfaces.

REGULATOR

• **DO NOT** disassemble or attempt to repair the regulator.
• Power connections must remain tight to avoid excessive heating from a loose connection.
• Only charge 12V batteries that comply with the parameters of the regulator.
• Battery connection may be wired to one battery or a bank of batteries.
• Keep in a dry well-ventilated area.

IMPORTANT!

*If load wires are not used it is recommended that these wires are covered.

(1) Connection of components to the controller MUST be completed in the sequence outlined in the following Wiring diagram, paying particular attention to the "+" and "-" wiring. When disconnecting components, the order is reversed.

(2) After powering the controller on, check that the LED indicator is green (if not green, please refer to section 8. Troubleshooting).

• Load self-test function

Load self-test function - the load will show as on when the controller is powered on.

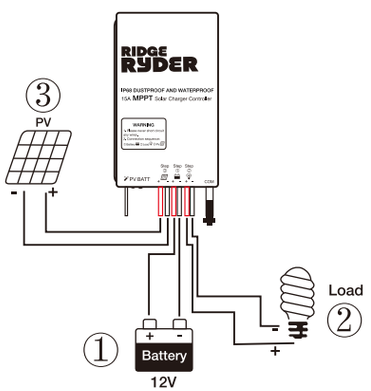

Wiring Diagram

FIRST AID & BATTERIES

• For advice, contact the Poisons Information Centre in Australia (PH:13 11 26) or the National Poisons Centre in New Zealand (PH: 0800 764 766).
• If battery acid makes contact with the skin or clothing, wash immediately with soap and water.
• If battery acid makes contact with the eyes, hold eyelids apart and flush the eye continuously with fresh running water for at least 15 minutes or until the Poisons information centre advises you to stop.
• If battery acid is swallowed, do not induce vomiting. Drink a glass of water and immediately seek medical assistance.

SPECIFICATION:

SOLAR TECHNOLOGY	High Efficiency Mono Crystalline
POWER OUTPUT	160 Watt Max @ 18V
TESTING CONDITION	AM1.5, 1000W/m^2, 25°C
OPERATING TEMPERATURE	-40°C to 85°C
ACCESSORIES	5m solar extension lead, with 50AMP connector plugs
	90cm lead with 50AMP connector plug & alligator clamps
	15A 12V IP68 Dustproof and waterproof MPPT regulator
DIMENSION	665x759x75mm(Folded)
	1335x759x35mm(Open)

CAUTION:

• **ONLY** use and store the product in a dry and well ventilated location.
• **DO NOT** use near flammable liquids or explosives.
• **STOP** use immediately if any wires become loose or electronic components are exposed.

INSTALLATION GUIDE

Step 1. Placement of the Solar Panel Kit

Place the solar panel kit in a position where it is exposed to the most direct sunlight. Best results face the solar panel kit in a northerly orientation.
Although the panel will function in the horizontal position, for best performance tilt the panel directly facing the sun.

Please Note: Always face the front side of solar panels toward the sun. To ensure maximum possible output, it is recommended that the Solar Panels are regularly moved to follow the sun's movement throughout the day and have been wiped down with a microfiber cloth.

Please Note: If using on new caravans, some have a diode fitted to prevent discharge (equalisation) with a car battery when the alternator is not operating.
Folding kit will need to be connected directly to a battery.

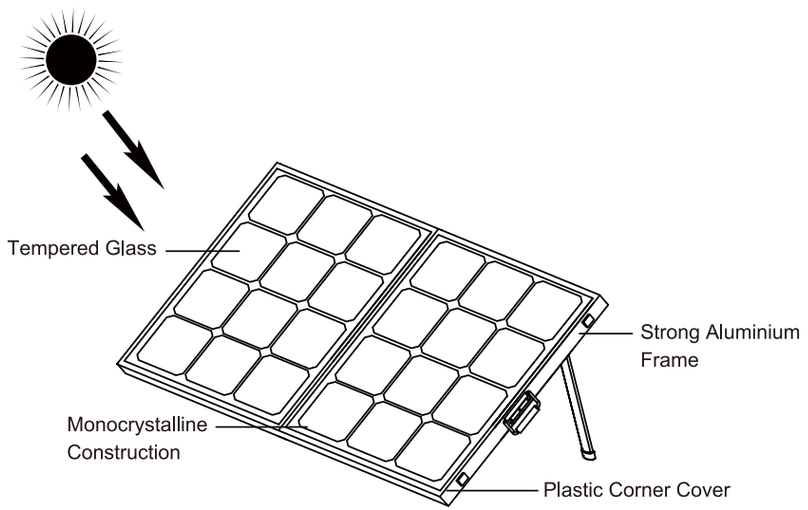

Step 2. Battery Connection

Connect the 5+0.9 meter lead to the 12V battery, Red clamp to the (+/Positive) terminal and Black clamp to the (-/Negative) terminal and then connect the solar panel to the regulator. The solar panel will now be charging the battery.
The Battery LED Indicator on the regulator will now be solid Green.

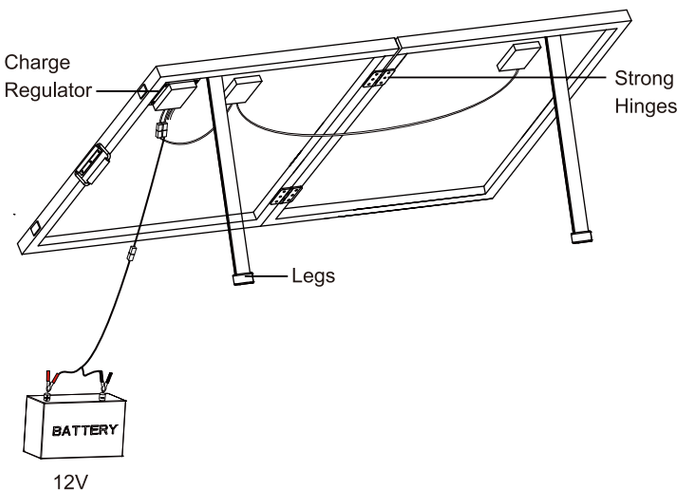

PICTURE 1: HOW TO CHARGE A 12V BATTERY?

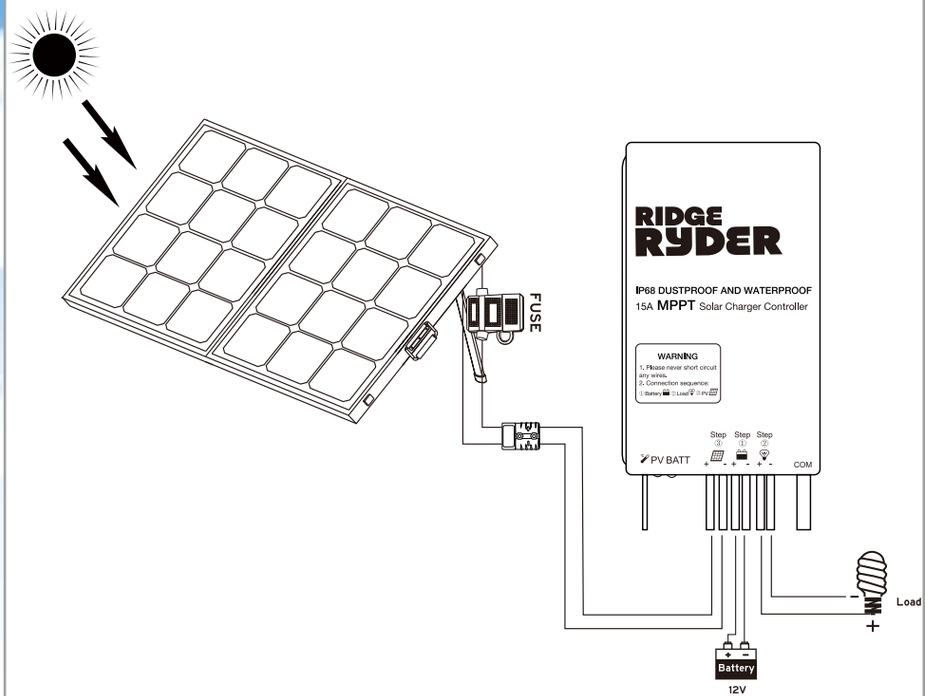

First connect battery to regulator.

Second connect load to regulator.

Last connect solar folding kit to regulator.

NOTE: Heavy loads should be connected to the battery directly.

ABOUT THE REGULATOR:

1. SAFETY INFORMATION

• Read all of the instructions in the manual before installation.
• DO NOT disassemble or attempt to repair the controller.
• Do disconnect the solar module before installing or moving the controller.
• Power connections must remain tight to avoid excessive heating from a loose connection.
• Only charge batteries that comply with the parameters of controller.
• Battery connection may be wired to one battery or a bank of batteries.
• Risk of electric shock due to the high voltages produced, from the photovoltaic (PV) and load when controller is in use.

2. OVERVIEW

The Ridge Ryder 15A MPPT Solar Charge Controller adapts to the Maximum Power Point Tracking (MPPT) charging method. This enables the systems charging and discharging management to obtain the most radical optimisation, increases system flexibility and reduces overall system running cost. This controller supports a variety of battery types, including sealed, gel & flooded batteries. It can also be used around the home in many applications, such as home solar systems, solar lighting & garden lamps.

Features:
• Advanced Maximum Power Point Tracking (MPPT) technology
• Long lifespan design, made from high quality components within an aluminium housing
• Ultra-fast tracking speed & efficiency
• Accurately recognises & tracks multiple power points
• Photovoltaic (PV) power limitation function
• IP68 dustproof and waterproof

3. PRODUCT SPECIFICATIONS

①	Charging Status LED indicator	④	Battery Positive and Negative Wires
②	Battery Status LED indicator	⑤	Load Positive and Negative Wires
③	PV Positive and Negative Wires	⑥	Waterproof cap

NOTE: 1. The waterproof cap must be fitted to prevent water & dust entering the unit.
2. COM adapter not available with this unit

4. WIRING

IMPORTANT!

*If load wires are not used it is recommended that these wires are covered.

(1) Connection of components to the controller MUST be completed in the sequence outlined in the following Wiring diagram, paying particular attention to the "+" and "-" wiring. When disconnecting components, the order is reversed.

(2) After powering the controller on, check that the LED indicator is green (if not green, please refer to section 8. Troubleshooting).

• Load self-test function

Load self-test function - the load will show as on when the controller is powered on.

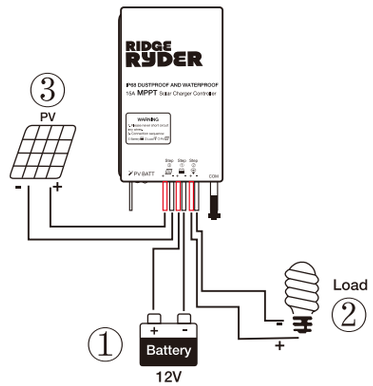

Wiring Diagram

5. LED INDICATORS

Indicator	Color	Status	Instruction
PV	Green	On Solid	Photovoltaic (PV) connection normal but low voltage (irradiance) from PV, no charging
	Green	Off	No PV voltage(night time) or PV connection problem
	Green	Slowly Flashing (1 flash per second)	Charging
	Green	Fast Flashing (4 flashes per second)	PV Over voltage
BATT	Green	On Solid	Normal
	Green	Slowly Flashing (1 flash per second)	Full
	Green	Fast Flashing (4 flashes per second)	Over voltage
	Orange	On Solid	Under voltage
	Red	On Solid	Over discharged
	Red	Fast Flashing (4 flashes per second)	Battery Overheating
Charging (green) and battery indicator (orange) flashing simultaneously			System voltage error

6. LOAD WORKING MODE

Note: The controller's 'ON' status indicator, is defaulted to show Load.

7. INBUILT CONTROLLER PROTECTIONS

Photovoltaic (PV) Protections:

• PV Over Current

Where PV over current occurs, battery charging will be limited to the maximum battery current rating. Oversized solar arrays will therefore not operate at peak power.

• PV Short Circuit

Where PV short circuit occurs, or PV input short circuits on low power, charging will stop, the regulator will turn off and the led will not be illuminated. Disconnect PV input from regulator and check for short circuit in the wiring and reconnect.

WARNING: Damage to the controller may occur where PV input short circuits on high power.

• PV Reverse Polarity

Where reverse polarity occurs, check the wire connections and resume normal operation.

WARNING: If this regulator is connected to a different PV to the one supplied and the current from that solar panel (PV) is greater than 22amps damage **WILL** occur to regulator.

Battery Protections:

• Reverse Polarity

Where battery reverse polarity occurs, check wire connections and resume normal operation.

• Over Voltage (16V)

Where over voltage is detected, the controller will stop charging the battery, to prevent damage to the battery. Refer to section 9 Technical specifications.

• Over Discharge (11.1V)

Where over discharge (low voltage) is detected, the controller will stop charging the battery, to prevent damage to the battery. Refer to section 9 Technical specifications.

• **Overheating**

The controller monitors environmental temperature via a sensor. Where environmental temperatures exceed 65°C, the controller will cease charging until the temperature reaches 55°C, after which charging will resume.

• **Temperature Sensor Error**

If temperature sensor faults, the controller will continue to charge/discharge battery at the default temperature of 25°C, to prevent damage to the battery from overcharging & low voltage.

• **Load Overload**

The controller will disconnect the load where the load current exceeds the maximum load current rating of 1.05 times (15.75 amps). Where overload does occur, reduce load demand and restart controller.

• **Load Short Circuit**

The controller will disconnect the load if short circuit (greater than or equal to 60 amps) occurs and will attempt reconnection 5 times, after the user must clear short circuit by disconnecting the regulator from the circuit, check all the wiring for the short circuit and reconnect the regulator in the steps on the front of the regulator to reset. If restart fails, please refer to 8. Troubleshooting.

8. TROUBLESHOOTING

Faults	Possible reasons	Action
LED charging indicator turns off in daylight, despite PV modules under direct sun.	Photovoltaic(PV) array disconnection	Check PV & battery wire connections are correct and tight.
No LED indicator	Battery voltage may be less than 8.5V	Measure battery voltage with a multi-meter. A minimum of 8.5V are required to power the controller.
Battery LED indicator - fast flashing - green	Battery over voltage	Check if battery voltage is higher than the over voltage disconnect and disconnect the PV
Battery LED indicator red	Battery over discharged	When the battery voltage is restored to or above LVR point (low voltage reconnect voltage), the load will recover
Battery LED indicator red flashing	Battery Overheating	The controller will automatically turn off until temperature falls below 55 °C, then resume normal operation.
Load output has stopped	Load Overload ^	① Reduce output load demand ② Restart controller.
	Load Short Circuit ^	① Check load connections, clear controller fault. ② Restart controller.

^ Where overload or short circuit occurs and the controller ceases charging, it will then attempt auto-recovery 5 times, in the following timing intervals: 5s, 10s, 15s, 20s and 25s.

9. TECHNICAL SPECIFICATIONS

Item \ Model		Tracer3906BP
Nominal system voltage		12/24VDC Auto
Rated charge/discharge current		15A
Rated charge power		200W/12V; 400W/24V
Lead acid	Over Voltage Disconnect Voltage	Sealed: 16V/Gel: 16V/Flooded: 16V
	Low Voltage Reconnect Voltage	Sealed/Gel/Flooded: 12.6V
	Low Voltage Disconnect Voltage	Sealed/Gel/Flooded: 11.1V
Enclosure		IP68
Mounting hole size		Φ3.5mm

10. DISCLAIMER

Under the following conditions, product warranty does not cover/apply:

- Damage caused through misuse, including use within unsuitable environments.
- Damage caused as a result of PV, load current, voltage or power exceeding the rated value of the controller.
- Damage caused from use in excessively hot environments.
- If the controller has been disassembled, opened or altered by the user
- Damage caused from natural elements, for example lightning.
- Damage caused during transportation by the user.

FREQUENTLY ASKED QUESTIONS

Q. What type of batteries can be used with the solar charger folding kit?
A. Deep Cycle, AGM, VRSLA, and flooded only. There are some motorcycles that use Lithium which is not compatible.
Q. Will the solar charger folding kit over charge my battery?
A. No. The solar charger folding kit regulator ensures that a steady charge is supplied to the battery without over charging.
Q. Can I extend/lengthen the battery lead wire?
A. If the lead is extended, this can result in a loss of voltage causing insufficient power being transferred from the solar charger folding kit. Product modifications will void your warranty.
Q. How do I clean the solar charger folding kit?
A. Dust & dirt should first be swept off the panel surface using a soft brush or a microfiber cloth then using a microfiber to wipe the panel surface to remove remaining dirt & grime. It is recommended that any bird droppings be removed as soon as possible to avoid surface damage.
Q: Is the solar charger folding kit waterproof or water resistant?
A: Yes, Provided solar charger folding kit has been mounted correctly they will operate in most weather conditions.
Q. Is the 12V 15A MPPT Regulator waterproof?
A. Yes, the regulator is IP68 rated, waterproof and dust proof.
Q. What is photovoltaic?
A. The photovoltaic(PV) effect are solar cells that produce direct current electricity from sunlight which can be used to power equipment or to recharge a battery.
Q: Is the solar charger folding kit suitable for 6/12/24Volt batteries?
A: No, the solar charger folding kit is only suitable for 12volt Batteries.
Q: Can the solar charger folding kit be left on the battery permanently?
A: It is recommended that solar charger folding kit is checked regularly as leaving a battery on charge permanently may cause damage to your battery.

WARRANTY

Our product is guaranteed to be free from quality and manufacturing defects for a period of 12 months.

If your product becomes defective during this period, SRGS PTY LTD will offer you either a replacement, credit or refund where a product is faulty; wrongly described; different from the sample shown to you or do not do what they are supposed to do.

This warranty will not cover substantially modified product; misuse or abuse of the product contrary to user instructions or packaging label; change of mind and normal wear and tear.

Our goods come with guarantees that cannot be excluded under the Australian Consumer Law. You are entitled to a replacement or refund for a major failure and for compensation for any other reasonably foreseeable loss or damage. You are also entitled to have the goods repaired or replaced if the goods fail to be of acceptable quality and failure does not amount to a major failure.

To claim the warranty, take the product to the front Service Desk of your nearest store of purchase. You will need to show receipt or other proof of purchase. Additional information may be required to process your claim. Should you not be able to provide proof of purchase with a receipt or bank statement, identification showing name, address and signature may be required to process your claim.

Any expenses relating to the return of your product to the store will normally have to be paid by you. For online store purchases, SRGS PTY LTD will pay for the return freight for any product assessed as having a major failure.

The benefits to the customer given by this warranty are in addition to other rights and remedies of the Australian Consumer Law in relation to the goods or services to which this warranty relates.

This warranty is provided by SRGS PTY LTD, 751 Gympie Road, Lawnton, QLD 4501, Australia. Phone: 1300 880 764.