1/4" ANGLE AIR DIE GRINDER INSTRUCTION MANUAL

Manufactured and packaged for SUPER CHEAP AUTO PTY LTD ABN 64 085 395 124
751 Gympie Road, Lawnton, Queensland 4501, Australia

BLACK RIDGE

1/4" Angle Air Die Grinder Instruction Manual

12 Month Warranty

Minimum 115LPM

PLU 340393

WARRANTY

This product is guaranteed against defects for a period of 12 months from date of purchase. This warranty is provided by Super Cheap Auto Pty Ltd ACN 085 395 124 (Supercheap Auto) of 751 Gympie Rd Lawnton QLD 4501 Ph (07) 3482 7500. Supercheap Auto will offer a repair, replacement product or store credit if the product is assessed as being defective during the warranty period.

To claim under this warranty, take this product to the Front Service Desk of your nearest Supercheap Auto store. For store locations, visit www.supercheapauto.com.au (AUS) or www.supercheapauto.co.nz (NZ). You will need your receipt or proof of purchase. Additional information may be requested of you to process your claim. Should you not be able to provide proof of purchase with a receipt or a bank statement, identification showing your name, address and signature may be required to process your claim.

This product may need to be sent to the manufacturer to assess the defect before determining any claim. Faults or defects caused by product modification, misuse and abuse, normal wear and tear or failure to follow user instructions are not covered under this warranty.

Our goods come with guarantees that cannot be excluded under the Australian Consumer Law. You are entitled to a replacement or refund for a major failure and for compensation for any other reasonably foreseeable loss or damage. You are also entitled to have the goods repaired or replaced if the goods fail to be of acceptable quality and the failure does not amount to a major failure.

Any expenses incurred relating to the return of this product to store will normally have to be paid by you. For more information contact your nearest Supercheap Auto store.

The benefits to the consumer given by this warranty are in addition to other rights and remedies of the Australian Consumer Law in relation to the goods and services to which this warranty relates.

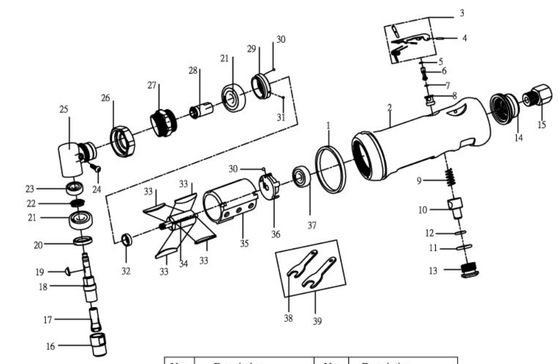

No.	Description	No.	Description
1	Washer	21	Ball Bearing
2	Housing	22	Spindle Gear
3	Throttle Lever	23	Ball Bearing
4	Pin	24	Screw
5	O Ring	25	Angle Head Housing
6	Valve Stem	26	Nut
7	O Ring	27	Nut
8	Valve Bushing	28	Spindle
9	Spring	29	Ball Bearing
10	Air Regulator	30	Stell Ball
11	O Ring	31	Stell Ball
12	O Ring	32	Spacer
13	Throttle Plug	33	Rotor Blade
14	Exhaust diffuser	34	Rotor
15	Inlet bushing	35	Cylinder
16	Collet Nut	36	Rear End Plate
17	Collet	37	Ball Bearing
18	Spindle	38	Spanner Wrench
19	Key	39	Spanner Wrench
20	Clamp Nut		

※ Trouble Shooting

The following form lists the common operating system with problem and solutions. Please read the form carefully and follow it.

☞WARNING: If any of the following symptoms appears during your operating, stop using the tool immediately, or serious personal injury could result. Only a qualified person or an authorized service center can perform repairs or replacement of tool.

Disconnect tool from air supply before attempting repair or adjustment. When replacing O-rings or Cylinder, lubricate with air tool oil before assembly.

PROBLEMS	POSSIBLE CAUSES	REMEDIES
Tool runs at normal speed but loses speed under load	• Motor parts worn. • Rotor Blade worn or sticking due to lack of lubricant.	• Lubricate air tool. • Note: if the air tool is used for extended periods it is advisable to lubricate regularly.
Tool runs slowly. Air flows slightly from exhaust	• Motor parts jammed with dirt particles • Air regulator in closed position • Air flow blocked by dirt. • Low air supply.	• Check air inlet filter for blockage. • Pour air tool lubricating oil into air inlet as per instructions. • Operate tool in short bursts quickly reversing rotation back and forth where applicable. • Check for obstructions to the air supply
Tools will not run. Air flows freely from exhaust	• One or more motor vanes stuck due to material build up.	• Pour air tool lubricating tool into air inlet. • Operate tool in short bursts of forward and/or reverse rotation where applicable. • Tap motor housing gently with plastic mallet. • Disconnect supply. Free motor by rotating drive shank manually where applicable
Tool will not shut off	• 'O' rings in the throttle valve dislodged from seat inlet valve.	• Replace 'O' ring.
Note: Repairs should be carried out by a qualified person.		

※ Technical Data

Max RPM 20,000
Minimum air flow.....120LPM
Air Inlet .....1/4"
Collet size .....1/4" (6mm)
Recommended Hose Size.....3/8"
Maximum Working Pressure.....90 PSI

※ Important Safety Rules

1. Always wear safety glasses, face mask or respiratory equipment.
2. Always ensure the air tool is disengaged before connecting to air supply.
3. Disconnect the air tool from the air supply before changing sockets, and before servicing.
4. Always keep your air tool clean and lubricated. Daily lubrication is essential to avoid internal corrosion and possible failure.
5. Do not wear watches, rings, bracelets or loose clothing when using air tools.
6. Do not overload the air tool. Allow the tool to operate at its optimum speed for maximum efficiency.
7. Do not increase the air pressure above the manufacturers recommended level as excessive overload can cause the air tool casing to split and also create excessive wear on moving parts and possible failure.
8. In the interests of safety, always ensure that the air tool has stopped before putting it down after use.
9. Always ensure that the work piece is firmly secured leaving both hands free to control the air tool.
10. Always ensure that accessories such as blades, discs, sockets, etc. are designed for use with the air tool and correctly attached before connecting the air tool to the air supply.
11. Keep children away from Air tools.

DO NOT allow wrench to free run for an extended period of time as this will shorten its life.

※ Operating Instruction

Description

- Angle head provides easy access into tight space.
- Ideal for grinding, deburring, porting and polishing

Air supply

1. Ensure air valve (or trigger) is in the "off" position before connecting to the air supply.
2. You will require air pressure of 90psi, and air flow according to specification.
3. **WARNING!** Ensure the air supply is clean and does not exceed 90psi while operating the tool. Air pressure exceeding the recommended specification and unclean air will cause excessive wear and shorten the product life. This may be dangerous and may cause damage or personal injury.
4. Drain the condensation from the air tank daily. Water in the air line will damage the tool.
5. Clean air inlet filter weekly.
6. Line pressure should be increased to compensate for unusually long air hoses (over 8 meters). The minimum hose diameter should be 1/4" I.D. and fittings must have the same inside dimensions.
7. Keep hose away from heat, oil and sharp edges. Check hose for wear, and make certain that all connections are secure.

Lubrication

An automatic in-line filter-regulator-lubricator is recommended (Fig4) as it increases tool life and keeps the tool in good working order. The in-line lubricator should be regularly checked and filled with air tool oil.
Proper adjustment of the in-line lubricator is performed by placing a sheet of paper next to the exhaust ports and holding the throttle open approximately 30 seconds. The lubricator is properly set when a light stain of oil collects on the paper. Excessive amounts of oil should be avoided.

In the event that it becomes necessary to store the tool for an extended period of time, ensure it is lubricated generously. The tool should be run for approximately 30 seconds to ensure oil has been evenly distributed throughout the tool. The tool should be stored in a clean and dry environment.

- It is most important that the tool should be properly lubricated by keeping the air line lubricator filled and correctly adjusted. Without proper lubrication, the tool will not work properly and parts will wear prematurely.
- Use only recommended lubricants, specially made for pneumatic applications. Substitutes may harm the rubber compounds in the tools O-rings and other rubber parts.

IMPORTANT!!!

- Lightweight aluminum body.
- Safety lever prevents accidental starts.
- Rear exhaust
- It can be used with all types of accessories for porting, weld breaking, and smoothing sharp dges, as well as deburring, polishing, and grinding.

Fig 4.

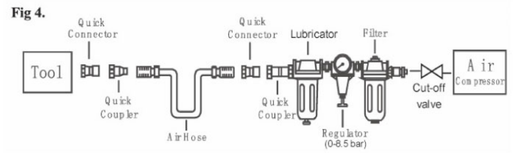

Loading and operation

☞WARNING: **Ensure you read, understand and apply safety instructions before use.**

1. Only use impact sockets which are specifically designed for use with an impact wrench.
2. Connect the wrench to the air hose.
3. Place the socket on the nut / bolt and depress the trigger to operate the wrench.
4. To change direction, push the button at the top of the handle. (part# 31 reverse valve)
5. The flow of air may be regulated by adjusting flow valve at the base of the handle.

DO NOT allow wrench to free run for an extended period of time as this will shorten its life.

※ Maintenance

☞WARNING: Disconnect air tool from air supply before changing accessories, servicing or performing maintenance and replacing or repairing damaged parts. *Use genuine parts only. Non-authorized parts may be dangerous and will void the warranty.*

1. Lubricate the air tool daily with a few drops of air tool oil dripped into the air inlet
2. Clean the air tool after use. DO NOT use worn or damaged sockets.
3. Loss of power or erratic action may be due to the following:
   a) Loss of air pressure. Moisture or restriction in the air pipe. Incorrect size or type of hose connectors. Check the air supply.
   b) Grit or gum deposits in the air tool may also reduce performance. If your model has an air strainer (located in the area of the air inlet), remove the strainer and clean it.
4. When not in use, disconnect from air supply, clean air tool and store it in a safe, dry, childproof location.